DESIGN + ENGINEERING
GROHE GERMANY

96.245.131/ÄM 231438/06.14

www.grohe.com

Pure Freude an Wasser

GROHE

## 27 057

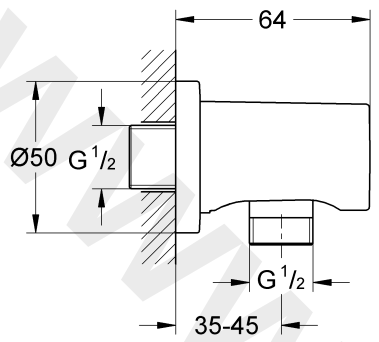


## 27 076

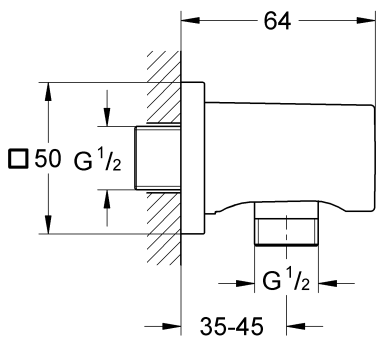


## 26 184

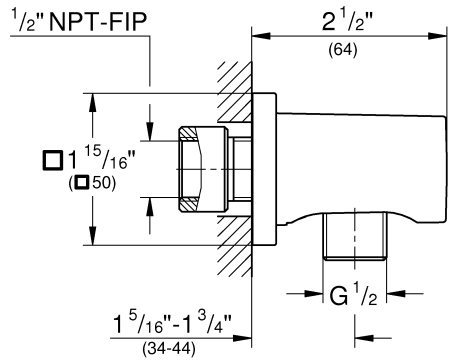


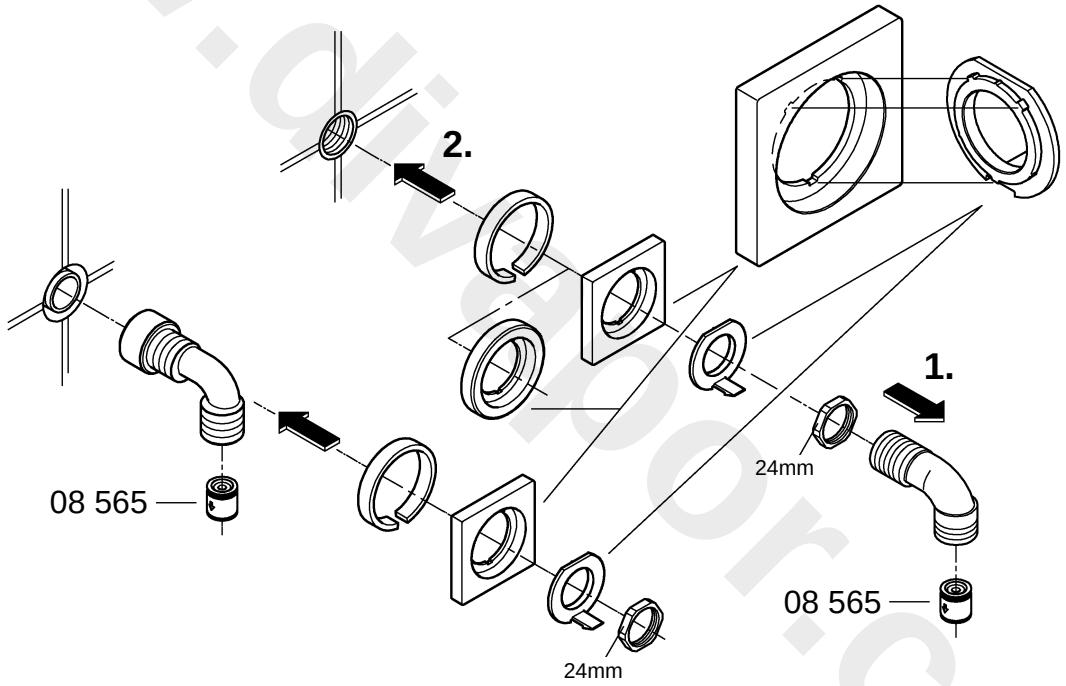


1.

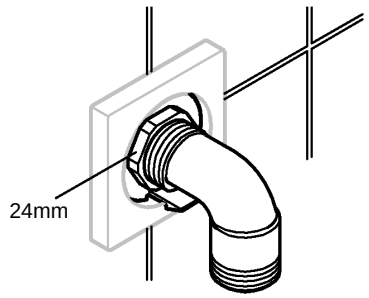


2.

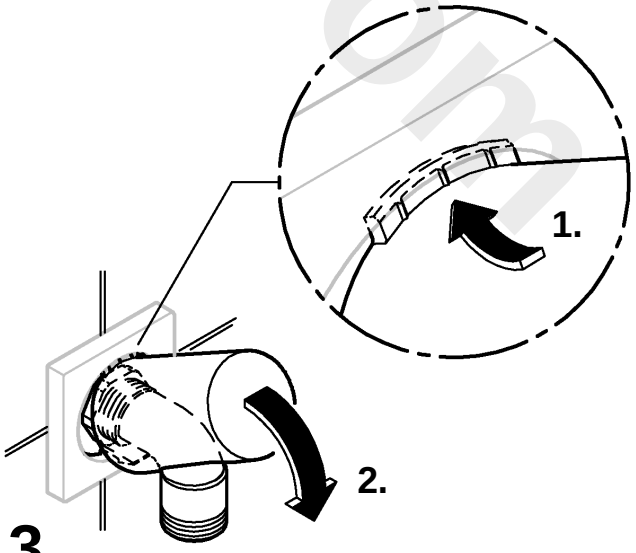


3.

www.diyvapor.com